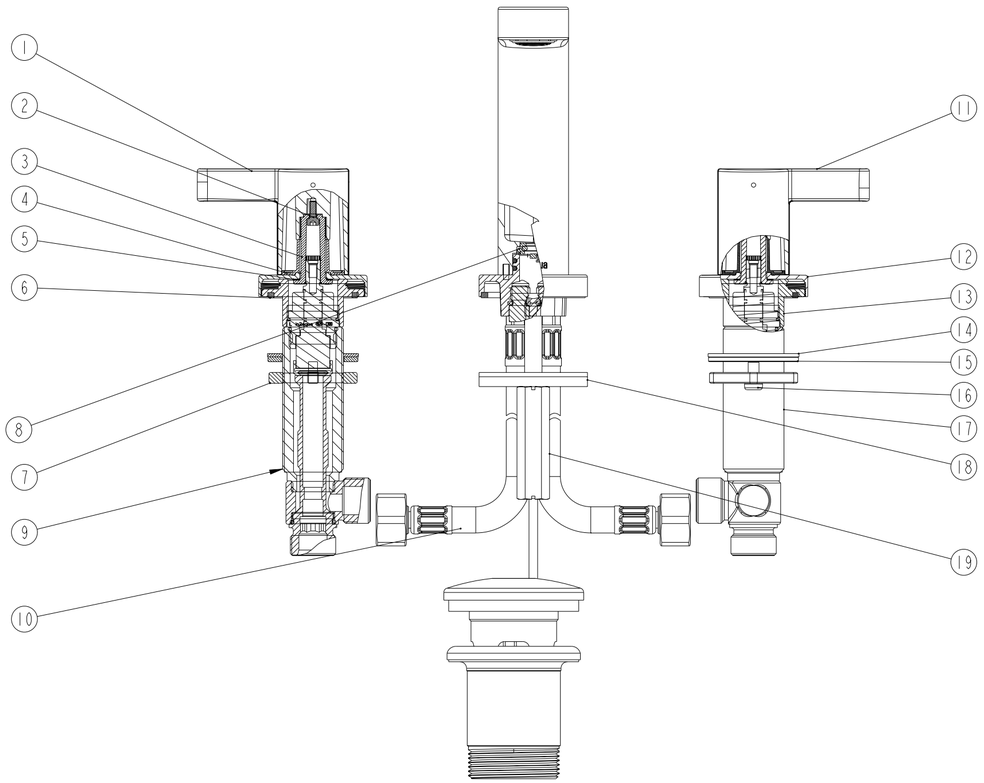

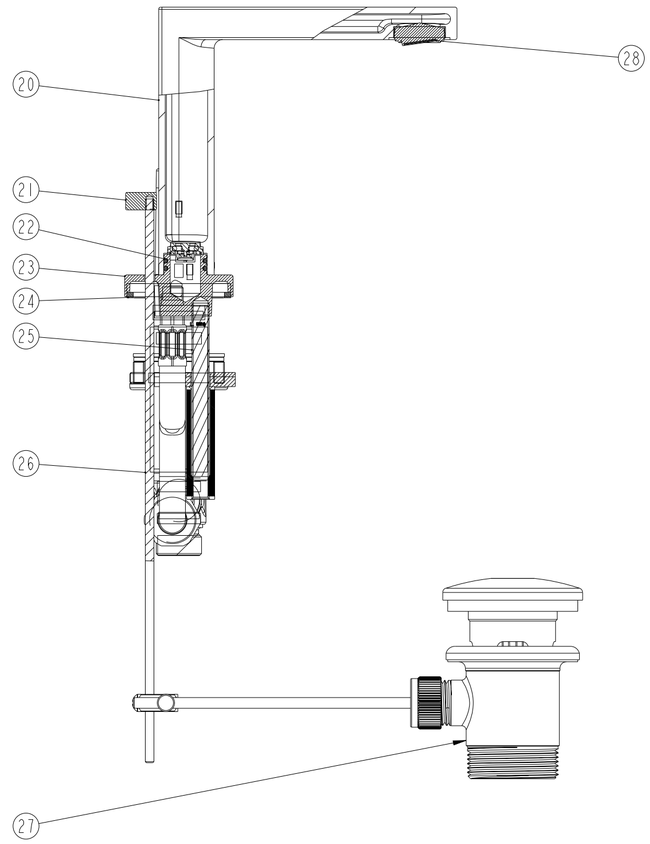

ITEM	DESCRIPTION	PART NO.	QTY
1	FORM HANDLE LEFT	Z87010	1
2	SETTING SCREW M3 X 8	S87001	4
3	HANDLE ADAPTER	P87003	2
4	EDGE HANDLE BUSHING	P87017	2
5	SPRING WASHER	B87090	2
6	SEAL 41X36X2.5	P87009	2
7	FIXATION NUT M28X1.5	B87025	2
8	FLOW RESTRICTOR	C087010	1
9	CARTRIDGE 1/2" VALVE 90 DEGREE LEFT TURN	CB87082	1
10	CONNECTION HOSE 1/2" BY M10	C087003	2
11	FORM HANDLE RIGHT	Z87011	1
12	EDGE HANDLE ESCUTCHEON	B87042	2
13	EDGE HAND SHOWER HOLDER DECK ADAPTER	B87043	2
14	WASHER 28 X 42	P87005	2
15	WASHER 28.8X41.5X2.2	B87024	2
16	SCREW M5 X 0.8	S87002	4
17	CARTRIDGE 1/2" VALVE 90 DEGREE RIGHT TURN	CB87083	1
18	FIXATION PLATE	C087002	1
19	FIXATION NUT M8	B87028	1
20	EDGE SPOUT WIDE SPREAD	B87012	1
21	EDGE LIFT KNOB WIDE SPREAD	B87045	1
22	O RING 16x2	P87014	2
23	EDGE SPOUT ESCUTCHEON WIDE SPREAD	B87046	1
24	SEAL 48X42X2.5	P87008	1
25	BOLT M8	B87022	1
26	DIVERTER ROD	B87027	1
27	POPUP WASTE	CB87075	1
28	AERATOR CACHE SLIM SSR M24X1SWIVEL AERATOR	C087012	1
29		DRY_BAG	1
30		PACKAGING	1
31		INSTRUCTION_SHEET	1

18.02.2015

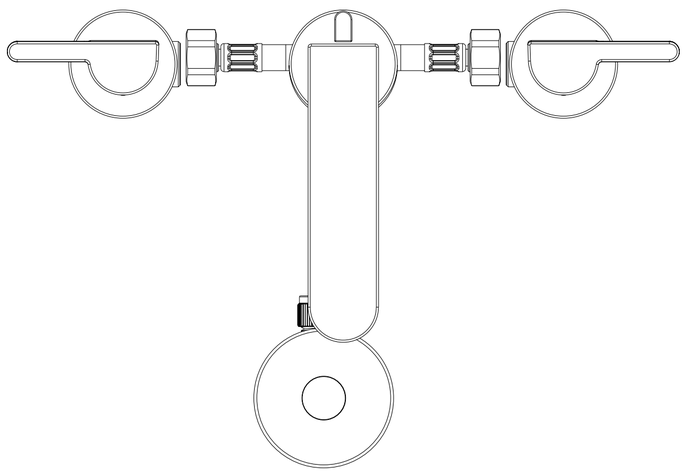

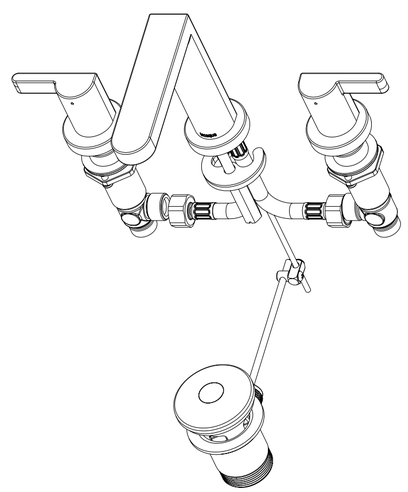

SCALE 3:10

EDGE widespread

Finish: chrome
Article number: 1014 1 00 1

in2aqua

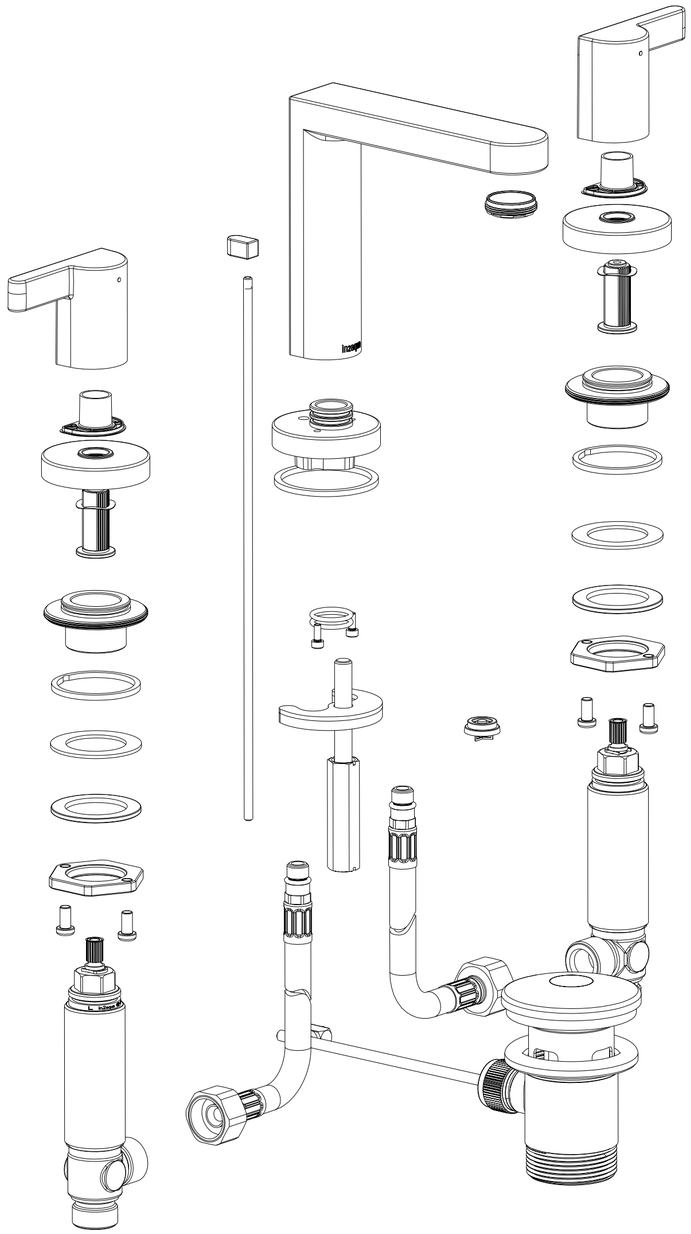

SCALE 1:2

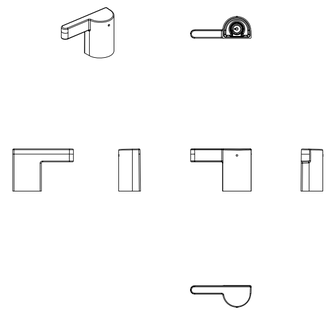

SCALE 1:5

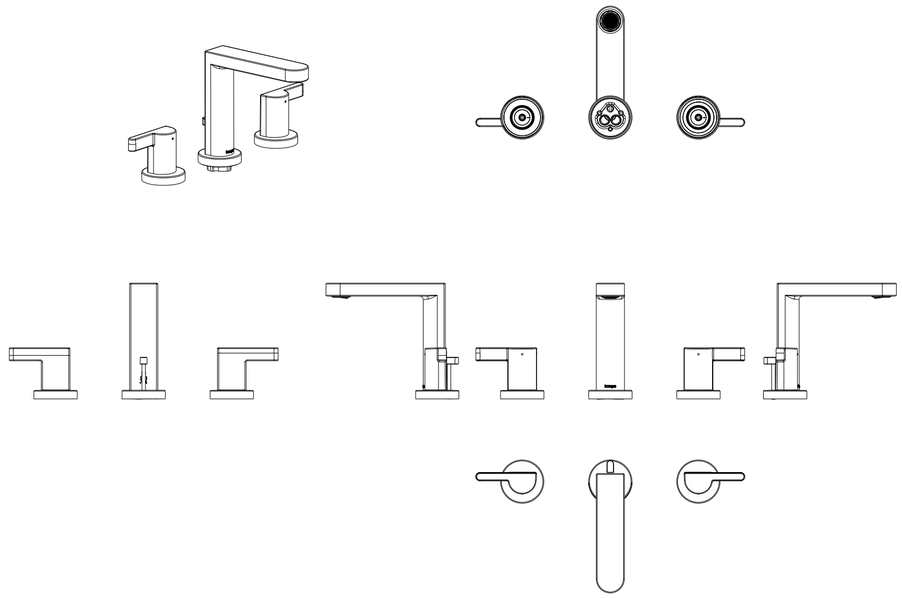

SCALE 1:5

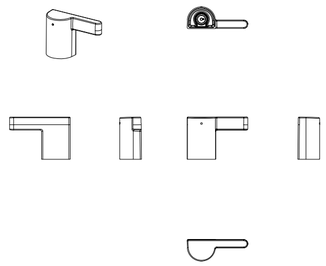

SCALE 1:5

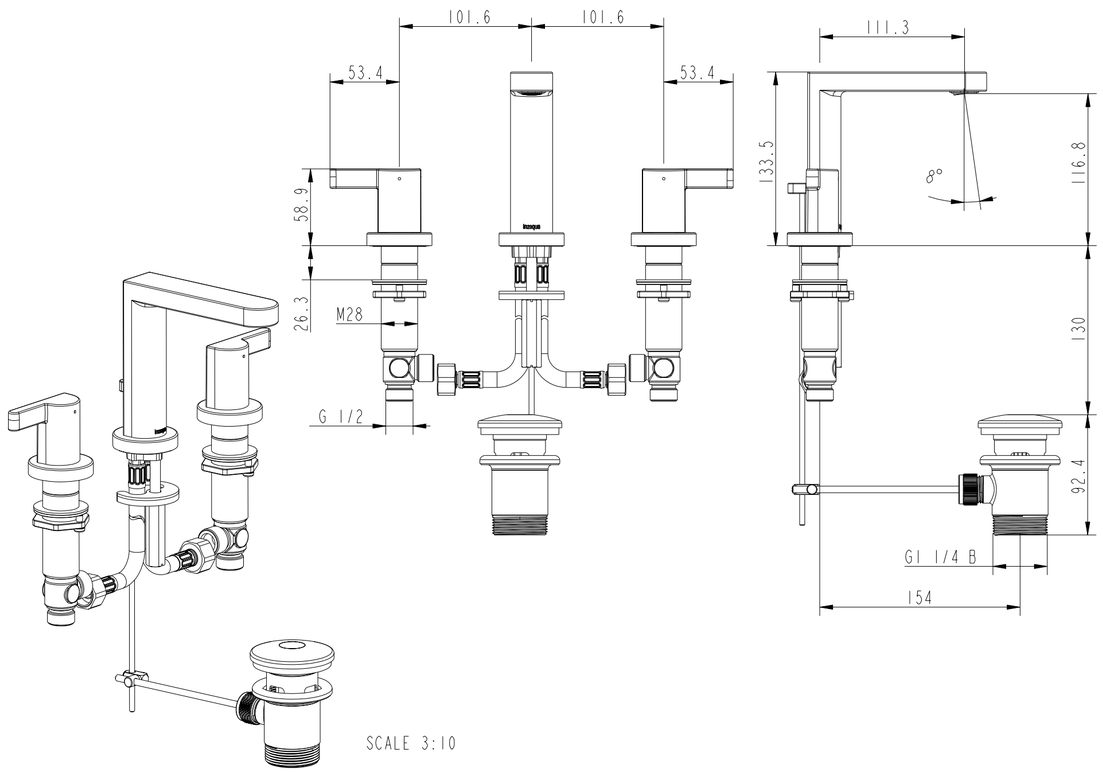

SCALE 3:10

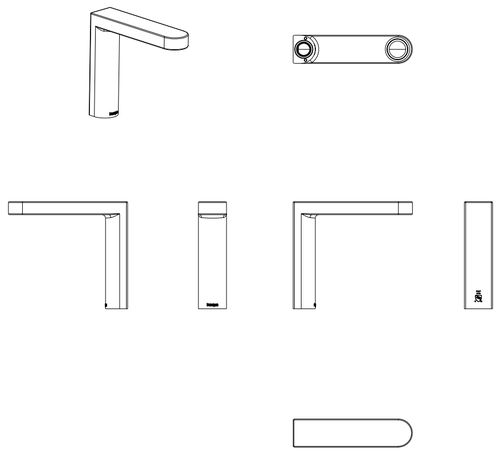

SCALE 1:5

EDGE widespread

Finish: chrome
Article number: 1014 1 00 1

in2aqua