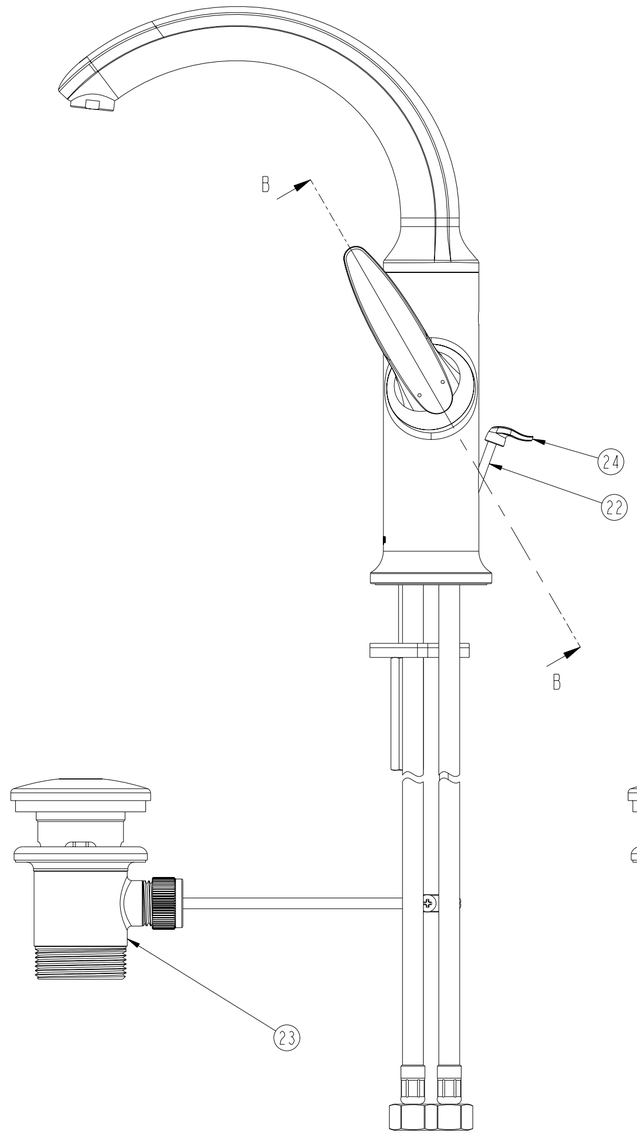

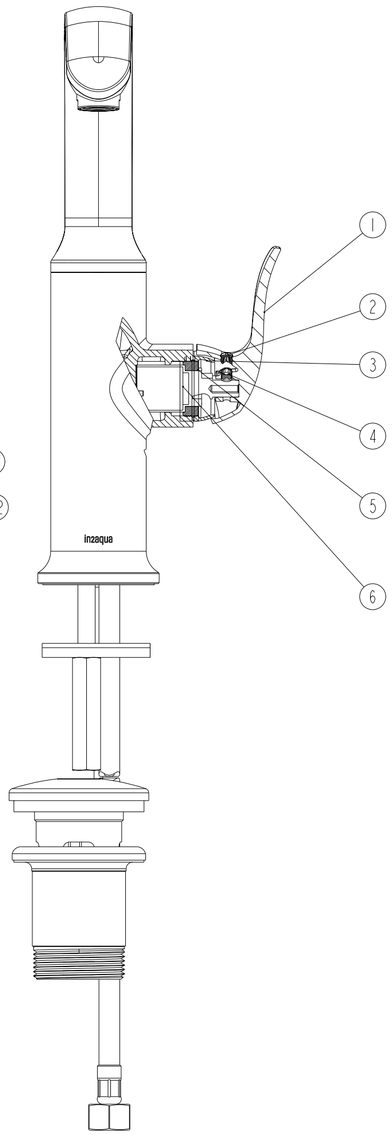

SECTION B-B

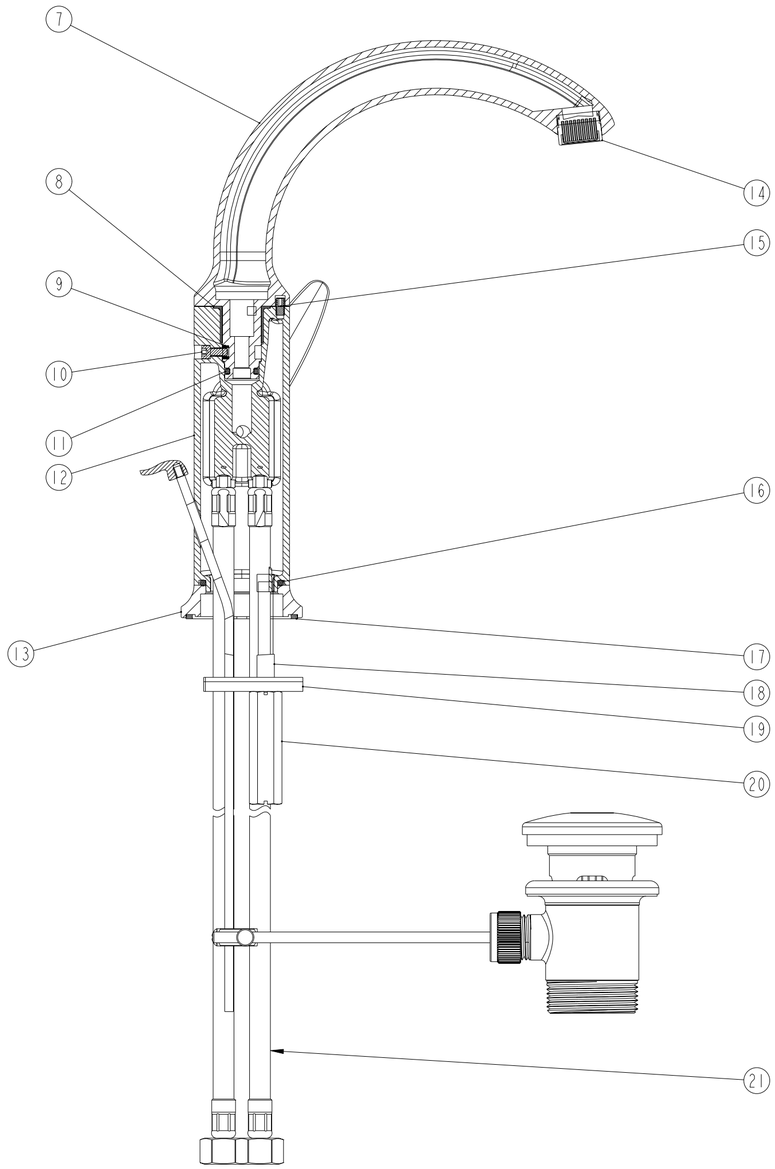

SECTION A-A

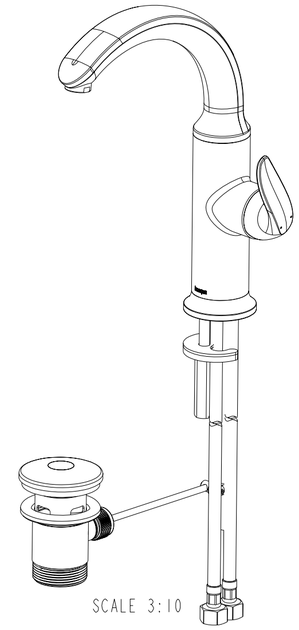

SCALE 3:10

ITEM	DESCRIPTION	PART NO.	QTY
1	STYLE HANDLE	Z87104	1
2	COVER	P87025	1
3	BONNET NUT	B87074	1
4	SET SCREW M5	S87008	1
5	LOCK RING	B87073	1
6	CARTRIDGE(K-25 PVD+)	C087019	1
7	SPOUT	B87063	1
8	PLASTIC RING	P87026	1
9	PLASTIC RETAINER	P87031	1
10	M4X8 SCREW	S87019	1
11	SEAL RING	P87044	1
12	SPOUT BASE	B87104	1
13	BASE RING	B87064	1
14	AERATORS MS6035 1.5GPM M20X1	C087013	1
15	SCREW M4X8	S87020	1
16	O-RING	P87075	1
17	SEAL	P87039	1
18	BOLT M8	B87022	1
19	FIXATION PLATE	C087002	1
20	FIXATION NUT M8	B87028	1
21	CONNECTION HOSE	C087026	2
22	DIVERTER ROD	B87252	1
23	POPUP WASTE	CB87075	1
24	STYLE LIFT KNOB WIDE SPREAD	Z87019	1
25		DRY_BAG	1
26		INSTRUCTION_SHEET	1
27		PACKAGING	1

16.02.2015

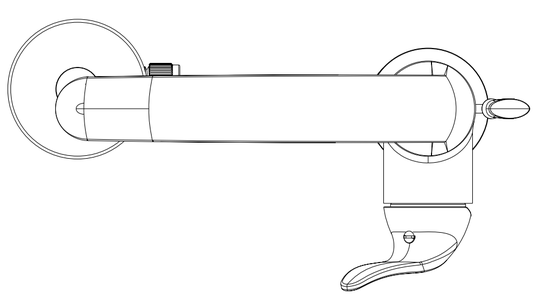

STYLE one-hole side-lever basin mixer

Finish: chrome
Article number: 1046 1 00 1

in2aqua

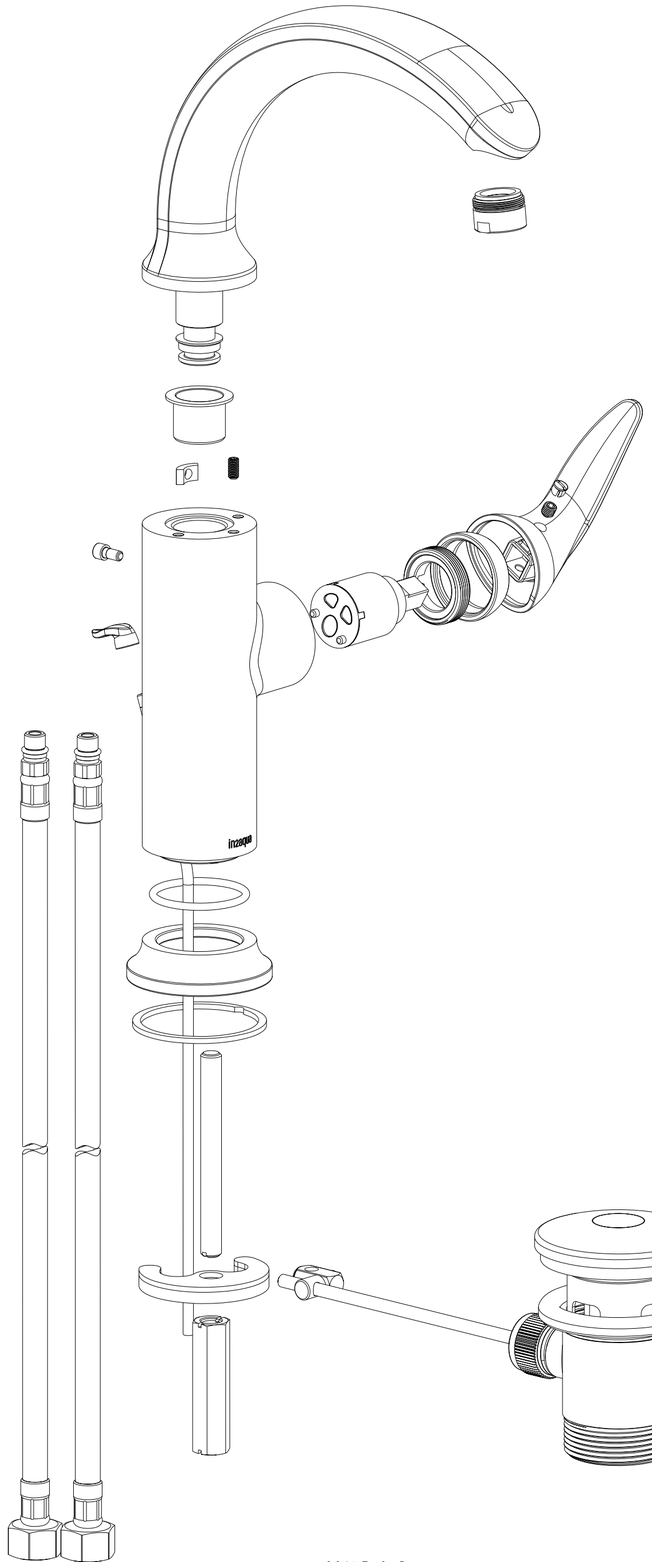

SCALE 3:5

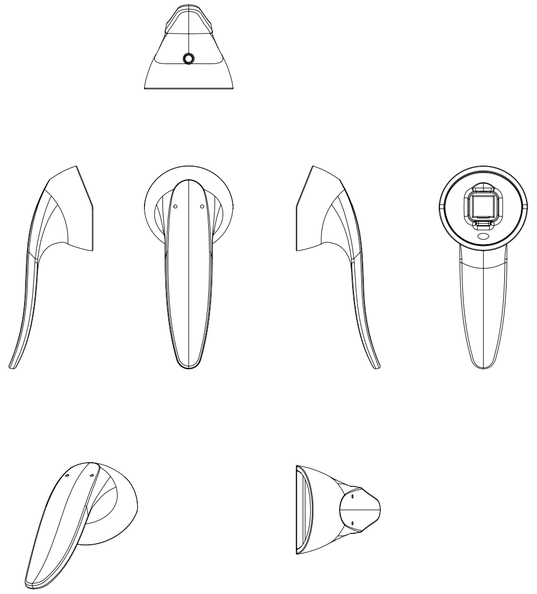

SCALE 1:2

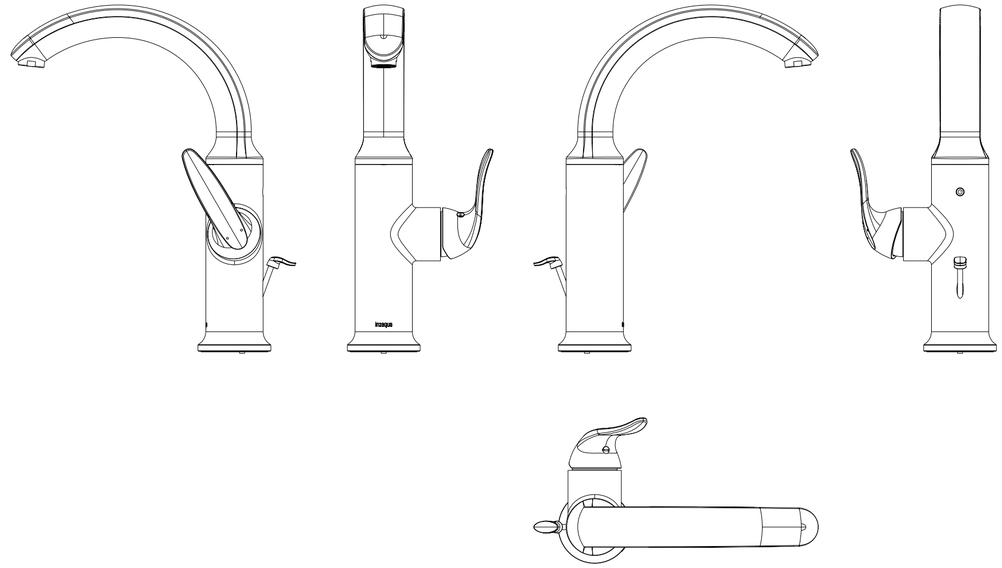

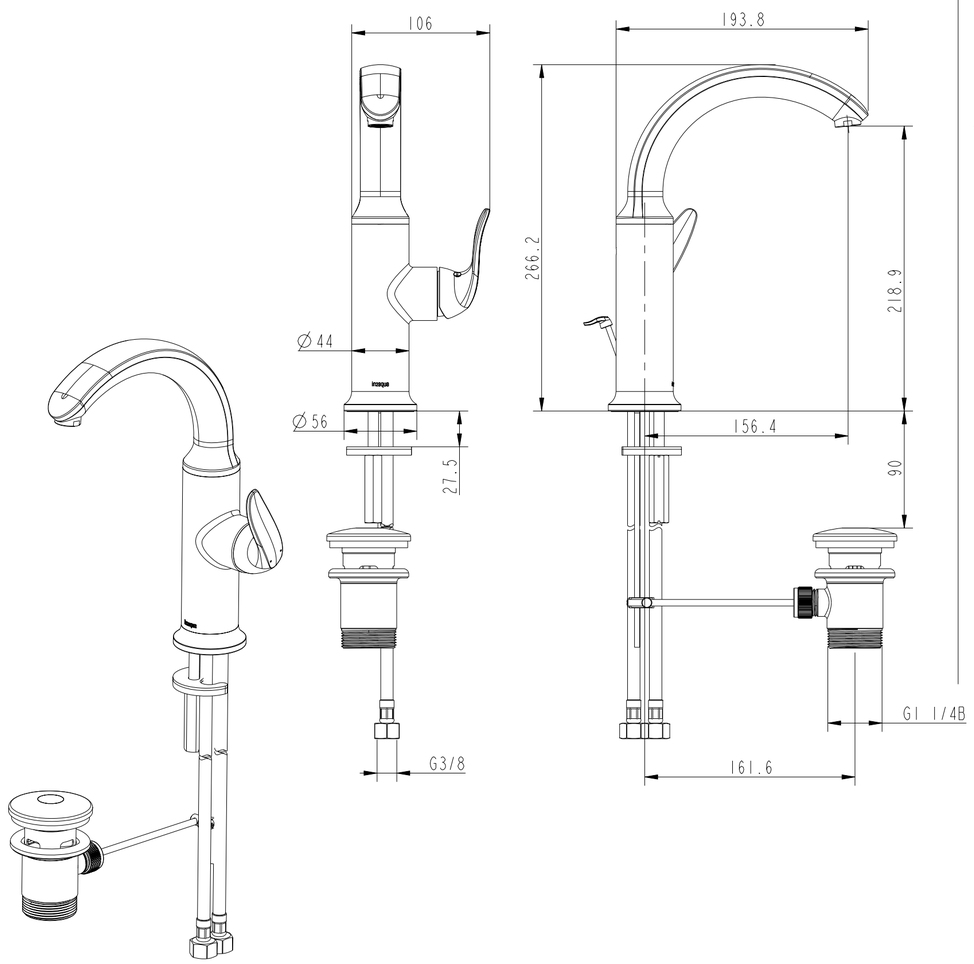

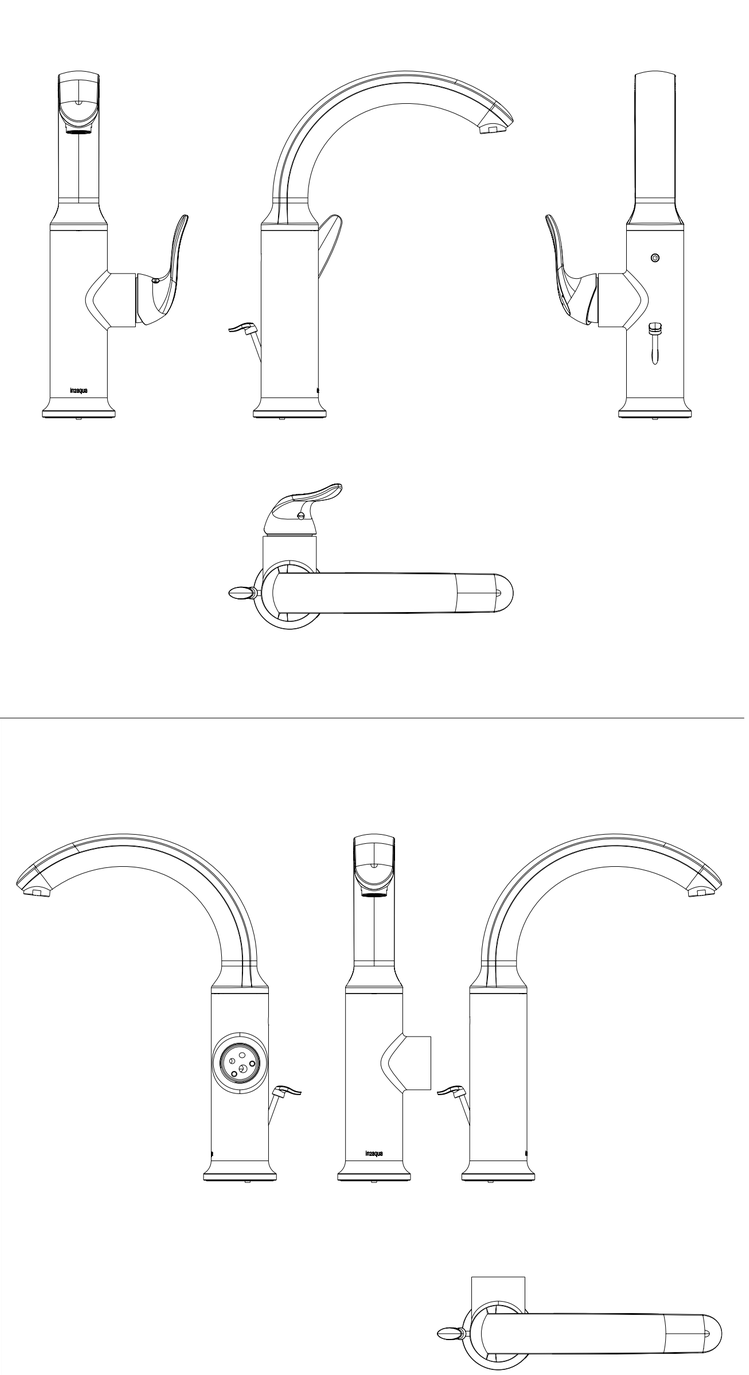

STYLE one-hole side-lever basin mixer

Finish: chrome
Article number: 1046 1 00 1

in2aqua